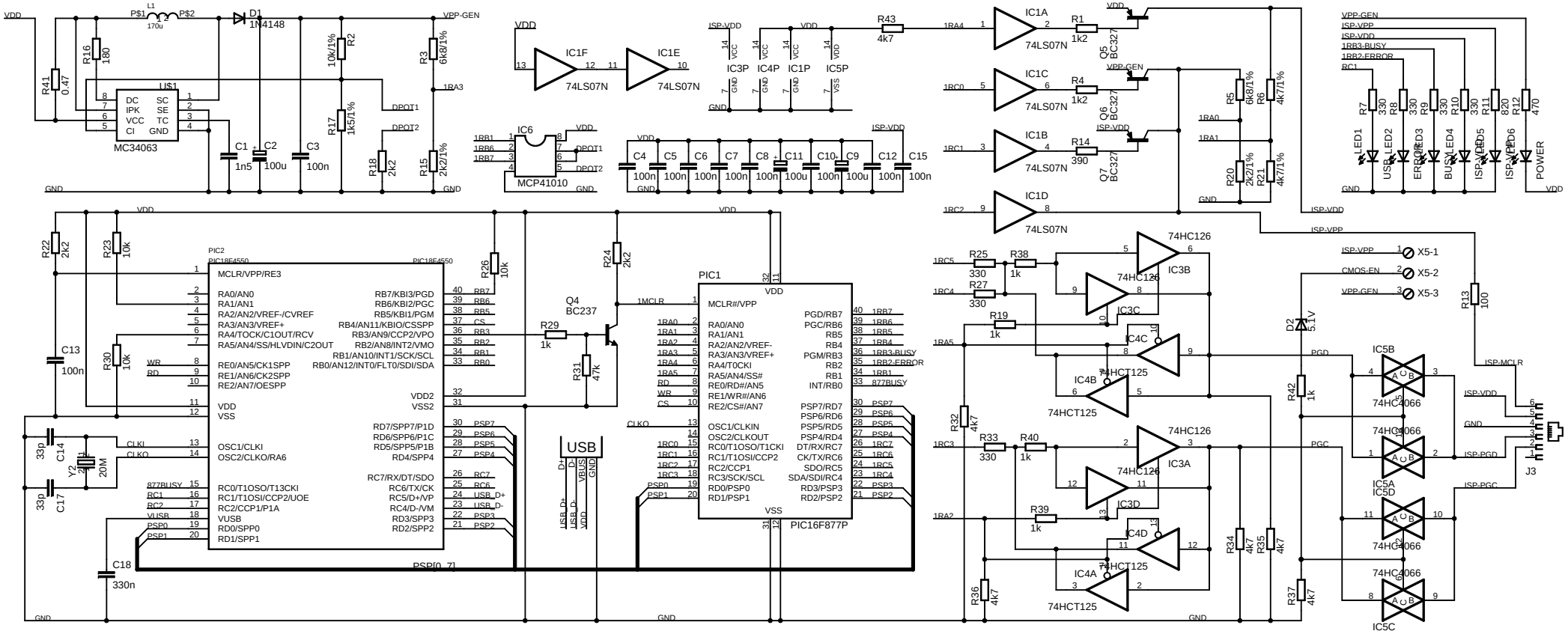
VDD
L1
P$1
P$2
170u
D1
1N4148
VPP-GEN
R41
0.47
R16
180
U$1
DC
SC
IPK
SE
VCC
TC
CI
GND
MC34063
C1
1n5
C2
100u
C3
100n
R17
1k5/1%
R2
10k/1%
R3
6k8/1%
R18
2k2
R15
2k2/1%
DPOT1
DPOT2
1RA3
GND
IC6
MCP41010
1RB1
1RB6
1RB7
IC1F
74LS07N
IC1E
74LS07N
ISP-VDD
IC3P
IC4P
IC1P
IC5P
VCC
GND
VSS
R43
4k7
1RA4
IC1A
74LS07N
R1
1k2
Q5
BC327
1RC0
IC1C
74LS07N
R4
1k2
Q6
BC327
1RC1
IC1B
74LS07N
R14
390
Q7
BC327
1RC2
IC1D
74LS07N
R5
6k8/1%
R6
4k7/1%
1RA0
1RA1
R20
2k2/1%
R21
4k7/1%
C4
C5
C6
C7
C8
C11
C10
C9
C12
C15
100n
100u
VPP-GEN
ISP-VPP
ISP-VDD
1RB3-BUSY
1RB2-ERROR
RC1
R7
330
R8
330
R9
330
R10
330
R11
820
R12
470
LED1
LED2
LED3
LED4
LED5
LED6
USB
ERROR
BUSY
ISP-VDD
ISP-VPP
POWER
R22
2k2
R23
10k
PIC2
PIC18F4550
MCLR/VPP/RE3
RA0/AN0
RA1/AN1
RA2/AN2/VREF-/CVREF
RA3/AN3/VREF+
RA4/TOCK/C1OUT/RCV
RA5/AN4/SS/HLVDIN/C2OUT
RE0/AN5/CK1SPP
RE1/AN6/CK2SPP
RE2/AN7/OESPP
VDD
VSS
OSC1/CLKI
OSC2/CLKO/RA6
RC0/T1OSO/T13CKI
RC1/T1OSI/CCP2/UOE
RC2/CCP1/P1A
VUSB
RD0/SPP0
RD1/SPP1
RB7/KBI3/PGD
RB6/KBI2/PGC
RB5/KBI1/PGM
RB4/AN11/KBIO/CSSPP
RB3/AN9/CCP2/VPO
RB2/AN8/INT2/VMO
RB1/AN10/INT1/SCK/SCL
RB0/AN12/INT0/FLT0/SDI/SDA
VDD2
VSS2
RD7/SPP7/P1D
RD6/SPP6/P1C
RD5/SPP5/P1B
RD4/SPP4
RC7/RX/DT/SDO
RC6/TX/CK
RC5/D+/VP
RC4/D-/VM
RD3/SPP3
RD2/SPP2
877BUSY
RC1
RC2
VUSB
PSP0
PSP1
PSP[0..7]
C13
100n
R30
10k
WR
RD
CLKI
CLKO
C14
33p
C17
33p
Y2
20M
C18
330n
R26
10k
R24
2k2
Q4
BC237
R29
1k
R31
47k
USB
D+
D-
VBUS
GND
USB_D+
USB_D-
VDD
1MCLR
1RA0
1RA1
1RA2
1RA3
1RA4
1RA5
RD
WR
CS
CLKO
1RC0
1RC1
1RC2
1RC3
PSP0
PSP1
PIC1
MCLR#/VPP
RA0/AN0
RA1/AN1
RA2/AN2/VREF-
RA3/AN3/VREF+
RA4/T0CKI
RA5/AN4/SS#
RE0/RD#/AN5
RE1/WR#/AN6
RE2/CS#/AN7
OSC1/CLKIN
OSC2/CLKOUT
RC0/T1OSO/T1CKI
RC1/T1OSI/CCP2
RC2/CCP1
RC3/SCK/SCL
RD0/PSP0
RD1/PSP1
PGD/RB7
PGC/RB6
RB5
RB4
PGM/RB3
RB2
RB1
INT/RB0
PSP7/RD7
PSP6/RD6
PSP5/RD5
PSP4/RD4
DT/RX/RC7
CK/TX/RC6
SDO/RC5
SDA/SDI/RC4
RD3/PSP3
RD2/PSP2
1RB3-BUSY
1RB2-ERROR
877BUSY
PIC16F877P
R25
330
R38
1k
R27
330
R19
1k
R32
4k7
R33
330
R40
1k
R39
1k
R36
4k7
74HC126
IC3B
IC3C
IC4C
IC4B
74HCT125
IC3A
IC3D
IC4D
IC4A
R34
4k7
R35
4k7
R37
4k7
R42
1k
D2
5.1V
PGD
PGC
IC5B
IC5A
IC5D
IC5C
74HC4066
ISP-MCLR
ISP-PGD
ISP-PGC
R13
100
X5-1
X5-2
X5-3
CMOS-EN
J3

ICD2
Potyo 2007.06.21.

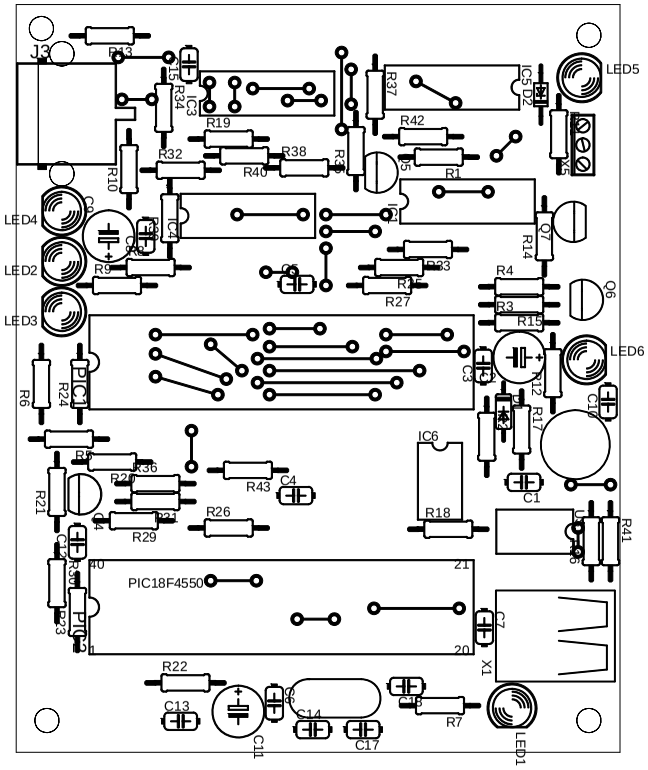
J3
R13
R34
IC3
R19
R37
IC5
D2
LED5
R42
R32
R38
R40
R35
R1
R10
LED4
C2
C8
IC4
IC2
Q7
R14
LED2
R9
Q5
R33
R4
R27
Q6
LED3
R3
R15
LED6
PIC1
R6
R24
C3
C5
R12
C10
R17
IC6
R8
R36
R20
R43
C4
C1
R21
R26
R18
R41
R29
C6
PIC18F4550
R30
PIC2
R23
C7
X1
R22
C13
C12
C14
C18
R7
C11
C17
LED1

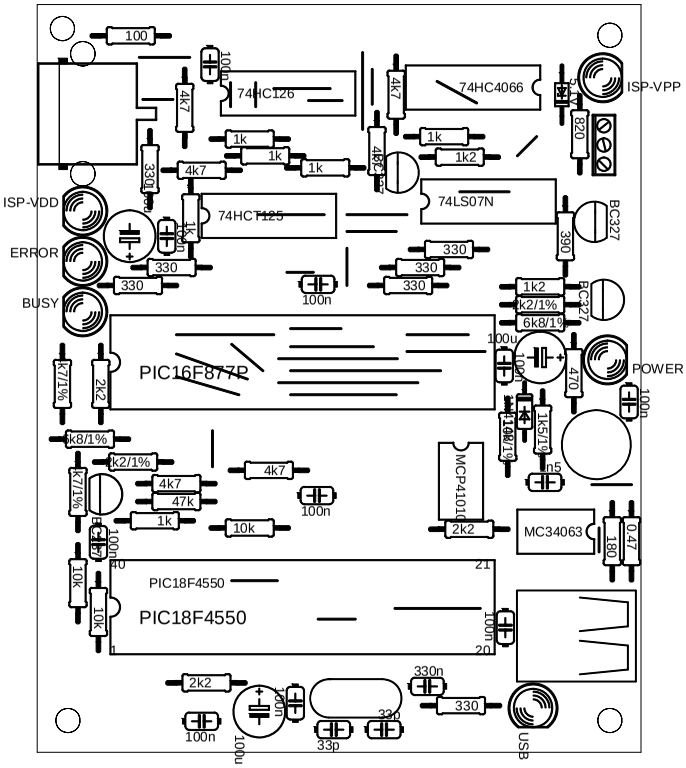
ISP-VPP
820
74HC4066
4k7
1k2
1k
74LS07N
BC327
390
330
1k2
1k2/1%
6k8/1%
BC327
470
POWER
100n
1k5/1%
6k8/1%
MCP41011
2k2
MC34063
180
0.47
74HC126
4k7
1k
1k
1k
4k7
330
4k7
74HCT125
1k
100n
330
330
330
100n
ISP-VDD
ERROR
BUSY
PIC16F877P
2k2
k7/1%
6k8/1%
k2/1%
4k7
47k
1k
10k
4k7
100n
k7/1%
100n
10k
10k
PIC18F4550
PIC18F4550
100n
2k2
100n
100u
33p
330n
330
USB